HEATER UNIT

COMPONENTS

AC2NL–01

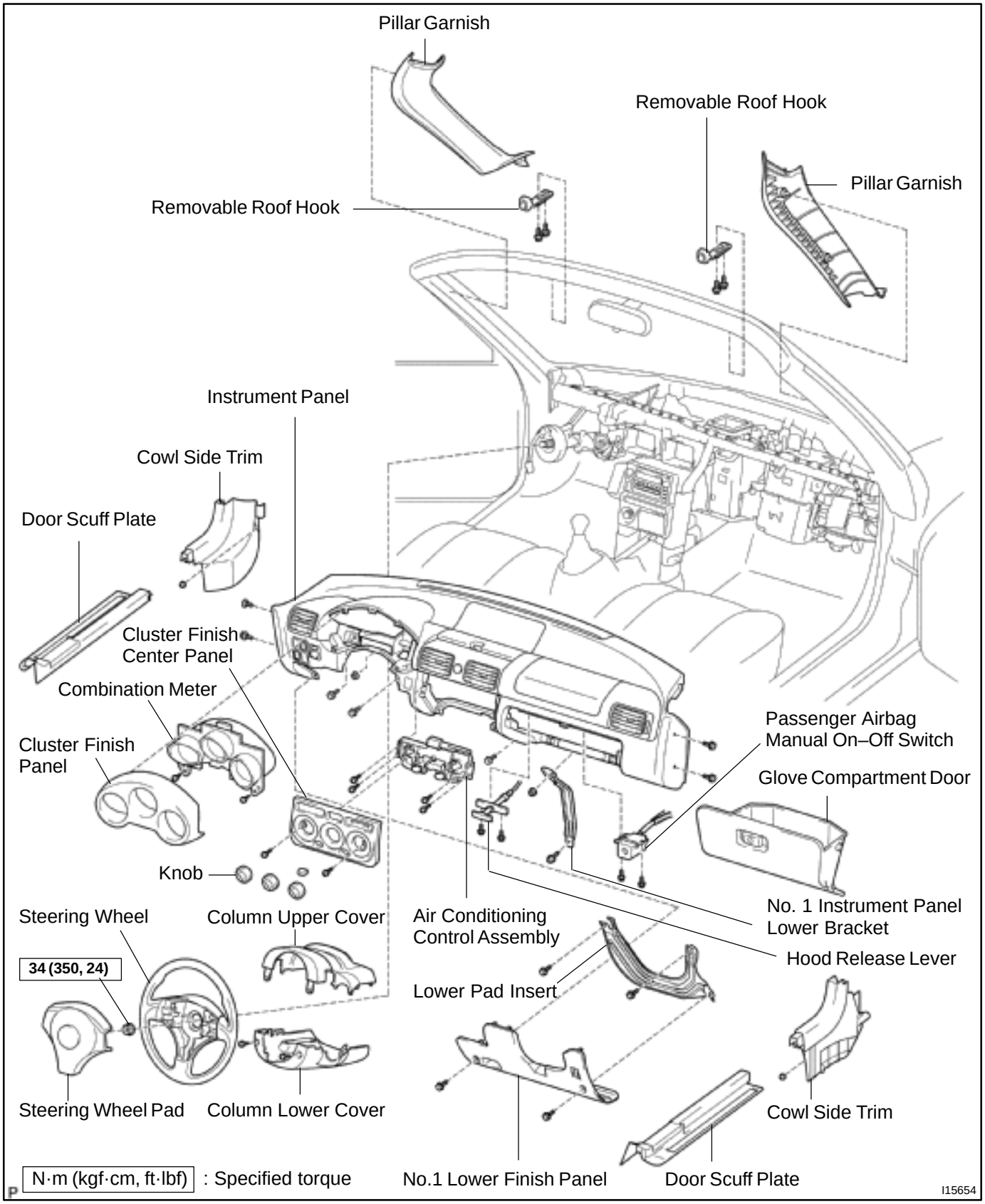

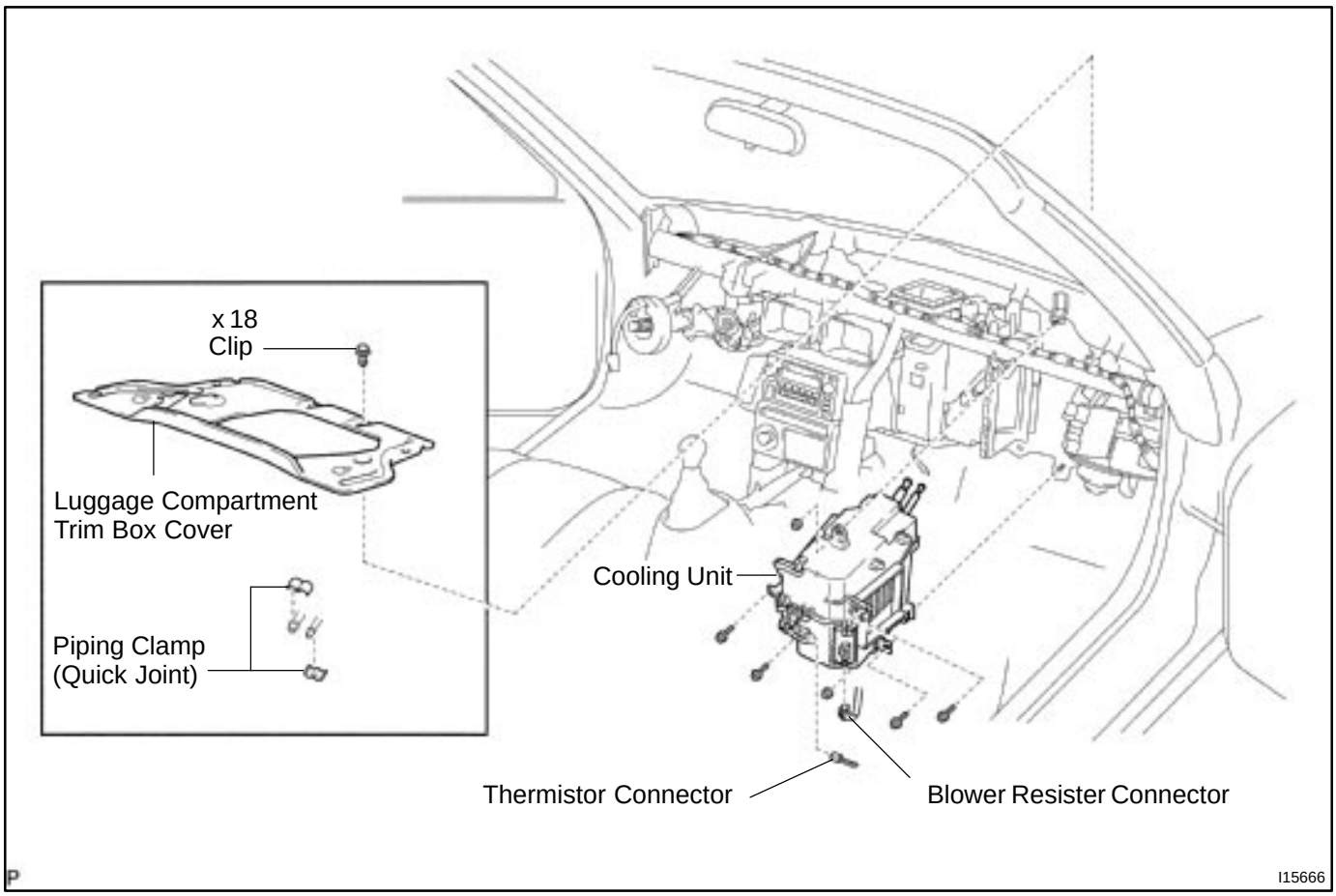
x 18
Clip
Luggage Compartment
Trim Box Cover
Piping Clamp
(Quick Joint)
Cooling Unit
Thermistor Connector
Blower Resister Connector
P
I15666

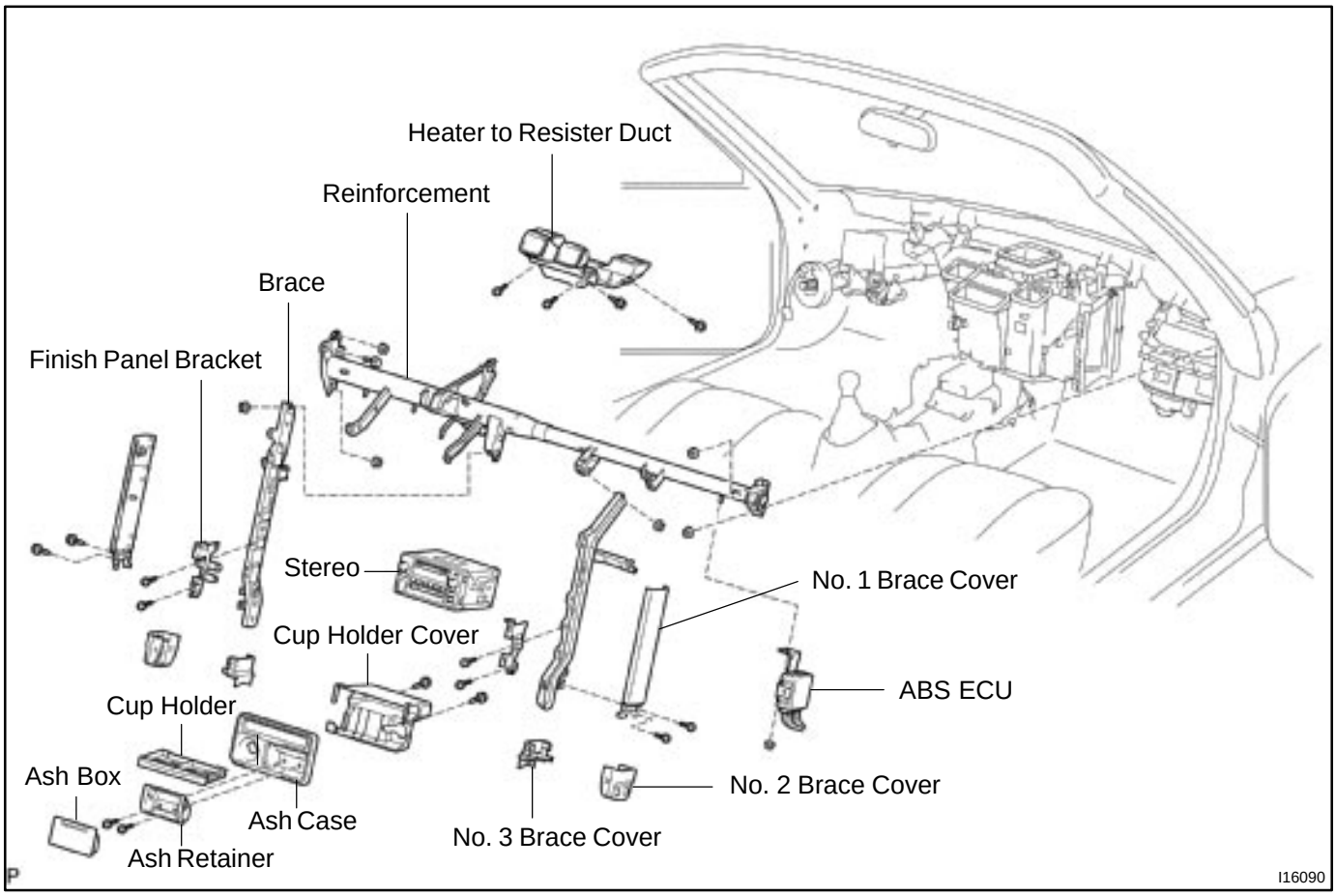
Heater to Resister Duct
Reinforcement
Brace
Finish Panel Bracket
Stereo
No. 1 Brace Cover
Cup Holder Cover
ABS ECU
Cup Holder
Ash Box
No. 2 Brace Cover
Ash Case
No. 3 Brace Cover
Ash Retainer
P
I16090

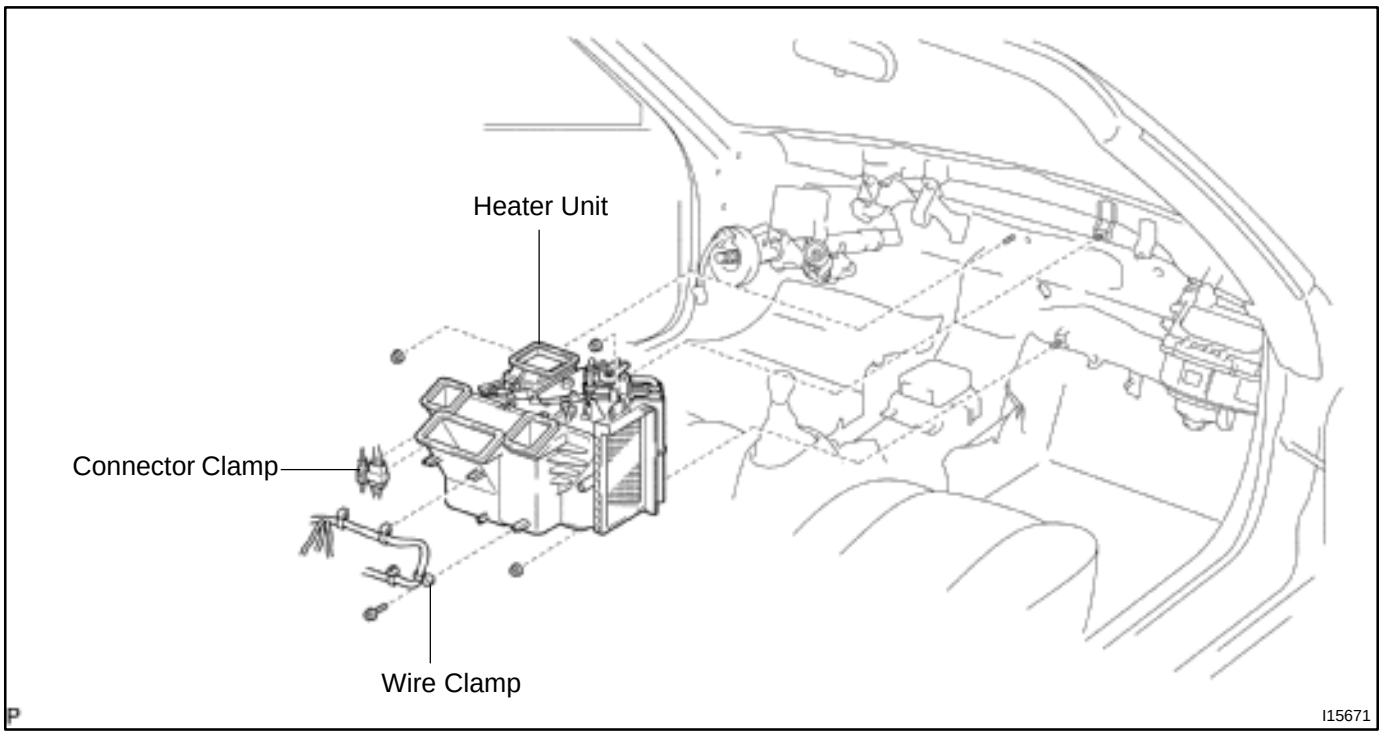
Heater Unit
Connector Clamp
Wire Clamp
P
I15671

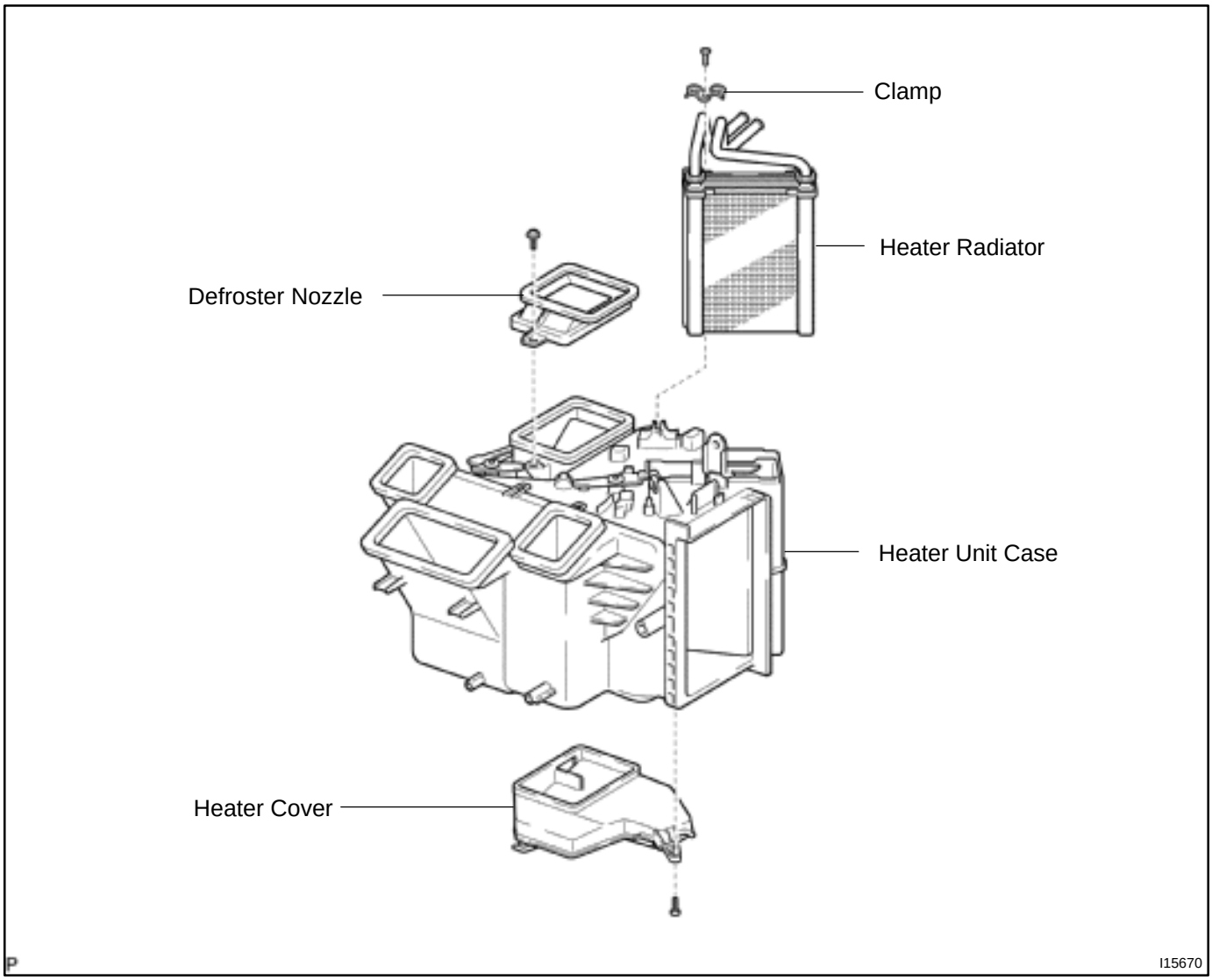
Clamp
Heater Radiator
Defroster Nozzle
Heater Unit Case
Heater Cover
P
I15670